A Safety system to prevent road users from being run over by a vehicle

Safety

CAR COMP. BODYWORK

KEYWORDS

- Active safety
- Bumper
- Shields
- Pedestrian
- Cyclists

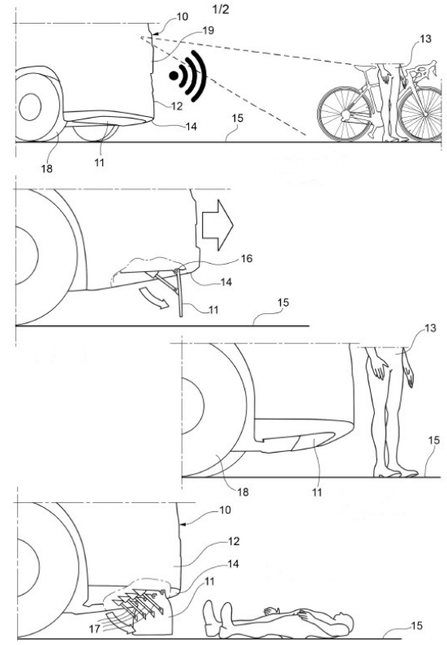

Innovations/advantages

Reduce the number and severity of accidents for pedestrians and cyclists;
Prevent the body from being run over by the wheels of the vehicle.

Application field

Vehicles engineering

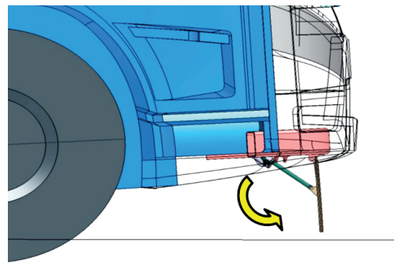

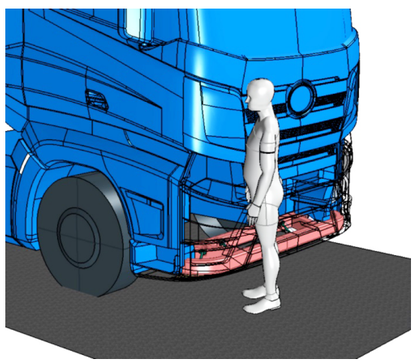

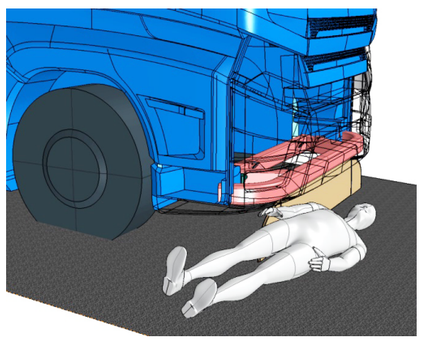

Product insight

- ***How can pedestrian safety be improved on mixed-use roads? One option is the use of innovative devices installed on vehicles that protect pedestrians in the event of an accident. Italdesign has patented a new system to prevent pedestrians, and road users in general, from being run over by vehicles. Using sensors or emergency braking, the vehicle automatically opens a shield which instantly closes the space between the lower edge of the bumper and the road surface.***

Patent Information

Priority Date – 23 April 2019

Application Number
PCT/IB2020/053760

Publication Number
WO 2020/217167 A1

IPR Dossier n.A14

National patent filings

Contact:

italdesigntoipr@italdesign.it

Available from June 1st, 2020

The content of this document is the property of Italdesign Giugiaro S.p.A. All rights reserved.

ITALDESIGN